JUNCTION BOXES AND SUNSHADES

Description

The SITES S.r.l. enclosure system winterizes process instruments and protects them from corrosion and mechanical abuse.

A full range of enclosures sizes are available to accommodate single and multiple instrument requirements.

Enclosures can be combined with a wide selection of heavy-duty mounts, brackets and heaters to create customized packages that suit each application.

Accessible from every angle

- Ideal for pressure, differential pressure and case type instruments in combination with manifolds, air sets, and purge meters.
- Top-hinged for easy access to process instruments from the front, top, or either side.
- Available in four sizes.
- Standard lid-support bracket keeps the lid open.

Common options include mounting kits, heaters and factory-installed tempered glass windows.

APPLICATION

The junction box, sunshade and the protections outlined in this catalog are the solution for the protection of process instrumentation from the weathering , industrial environments and damage mechanics.

OUR PRODUCTS ARE:

- Single Junction Boxes
- Double Junction Boxes
- Triple Junction Boxes
- Single Protection Tool
- Double Protection Tool
- Protection for Transmitters
- Soft Cover

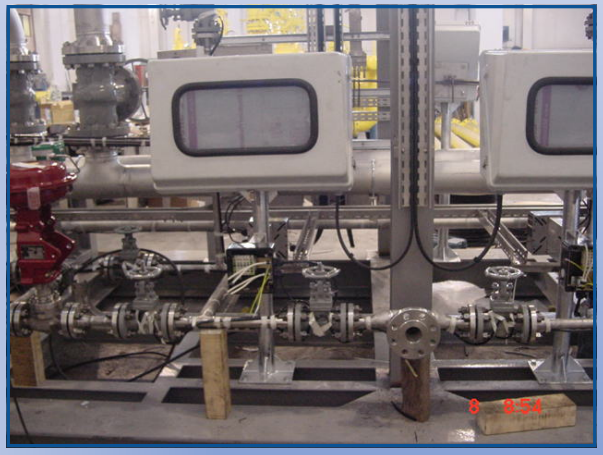

FEATURES & CAPABILITIES

The junction boxes are designed to contain flow transmitters, level and pressure, ensuring total access to the instrument, to the manifold and accessories thereof; also provide protection to the instrumentation from:

- Weather Conditions (humidity, rain and dust)
- Corrosion (industrial)
- Mechanical Damage
- Freezing

To protect against freezing we propose different solutions:

1. Internal insulation with polyurethane coated aluminum foil with a thickness of 20 mm.
2. Safe area electric heater
3. Electric heater for hazardous area
4. Coil for steam heating
5. Internal insulation with polyurethane coated aluminum foil with a thickness of 20 mm, with electric heater for hazardous area
6. Internal insulation with polyurethane coated aluminum foil with a thickness of 20 mm, with electric heater for safe area
7. Internal insulation with polyurethane coated aluminum foil with a thickness of 20 mm, with coil for steam heating

INSTRUMENT PROTECTION BOXES

CPS 100 – CPS 150 – CPS 200 – CPS 300

CAN INCLUDE INSTRUMENT WITH MANIFOLD AND RELATED OPTIONS

The box is made of fiberglass reinforced polyester with a thickness of 5 mm, gray RAL 7035.

Constituted by the union of a fixed lower half-shell with a mobile upper half-shell, the opening is maintained in a safe manner with a hinge in stainless steel, the closure may be made (only on a voluntary basis) acting on it.

The neoprene gasket mounted on the bottom ensures a perfect tightness and impermeability to liquids and dust.

The closing of the Junction Box is provided by two stainless steel hooks mounted on the side.

The excellent finish material has the following characteristics:

Degree of protection IP-65

Resistance to shock

Self-extinguishing

No absorption of hydrocarbons

Operating temperature -50 °: +80 °

INSTRUMENT PROTECTION BOXES

CPS 100

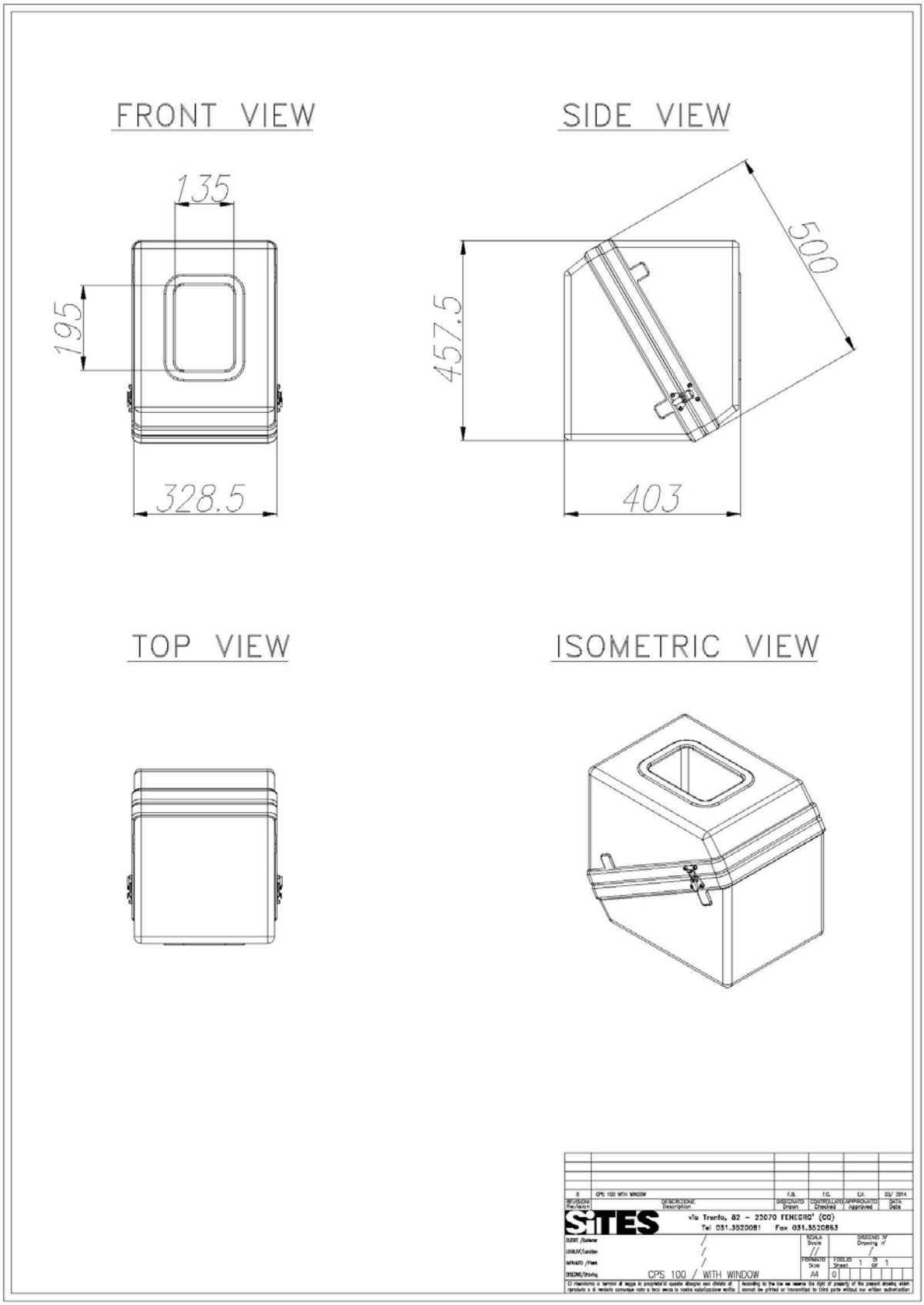

INSTRUMENT PROTECTION BOXES

CPS 150

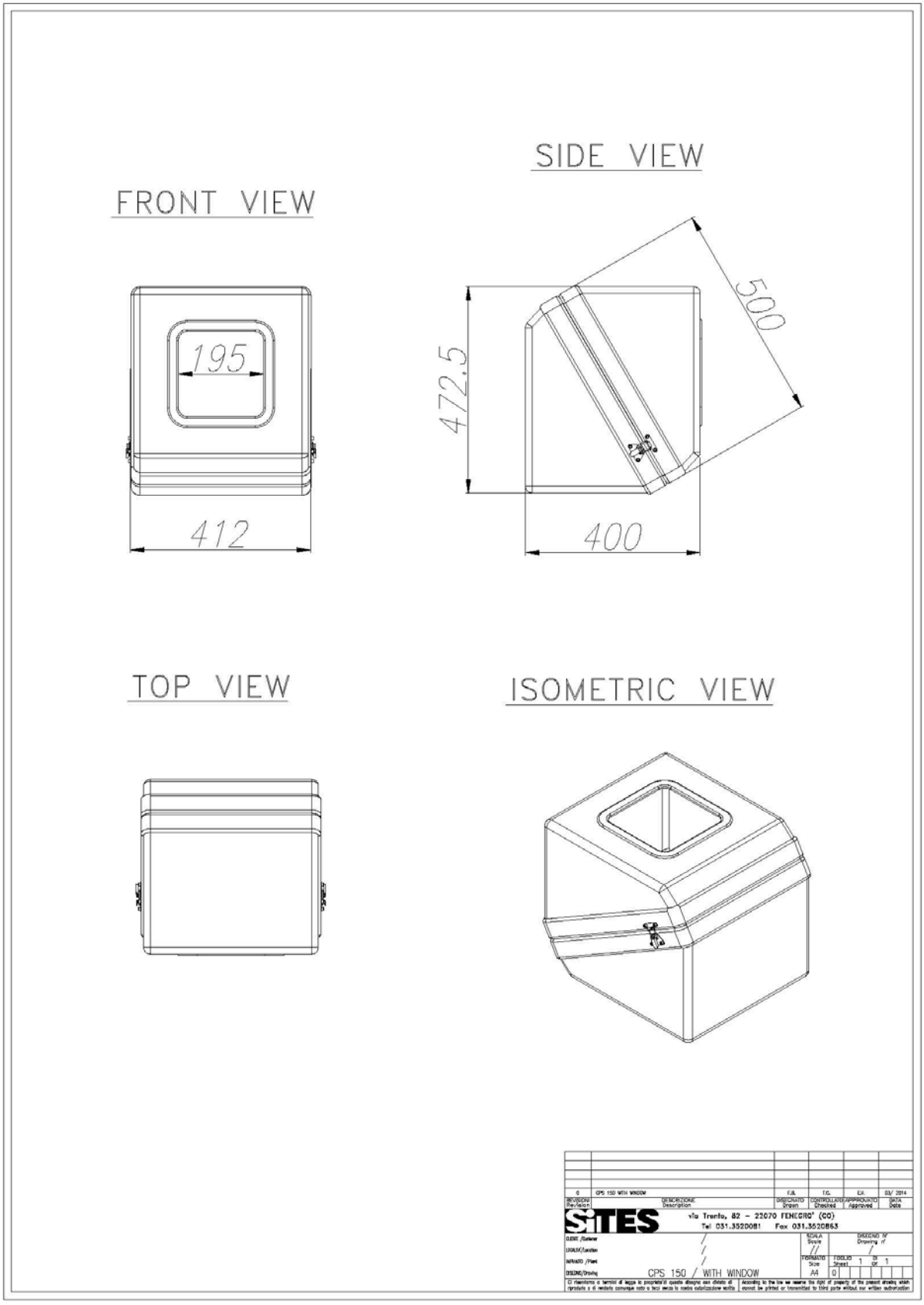

INSTRUMENT PROTECTION BOXES

CPS 200

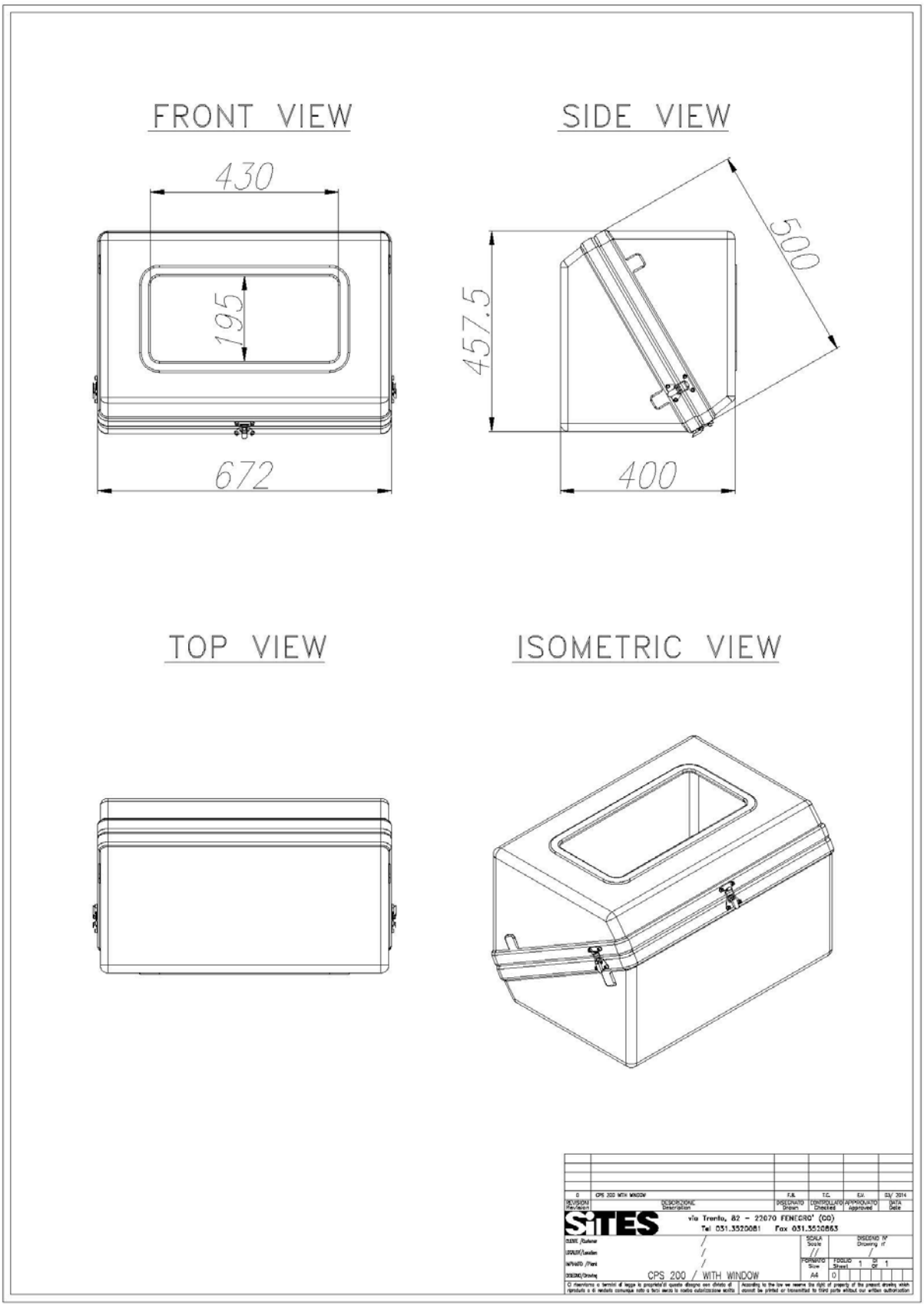

INSTRUMENT PROTECTION BOXES

CPS 300

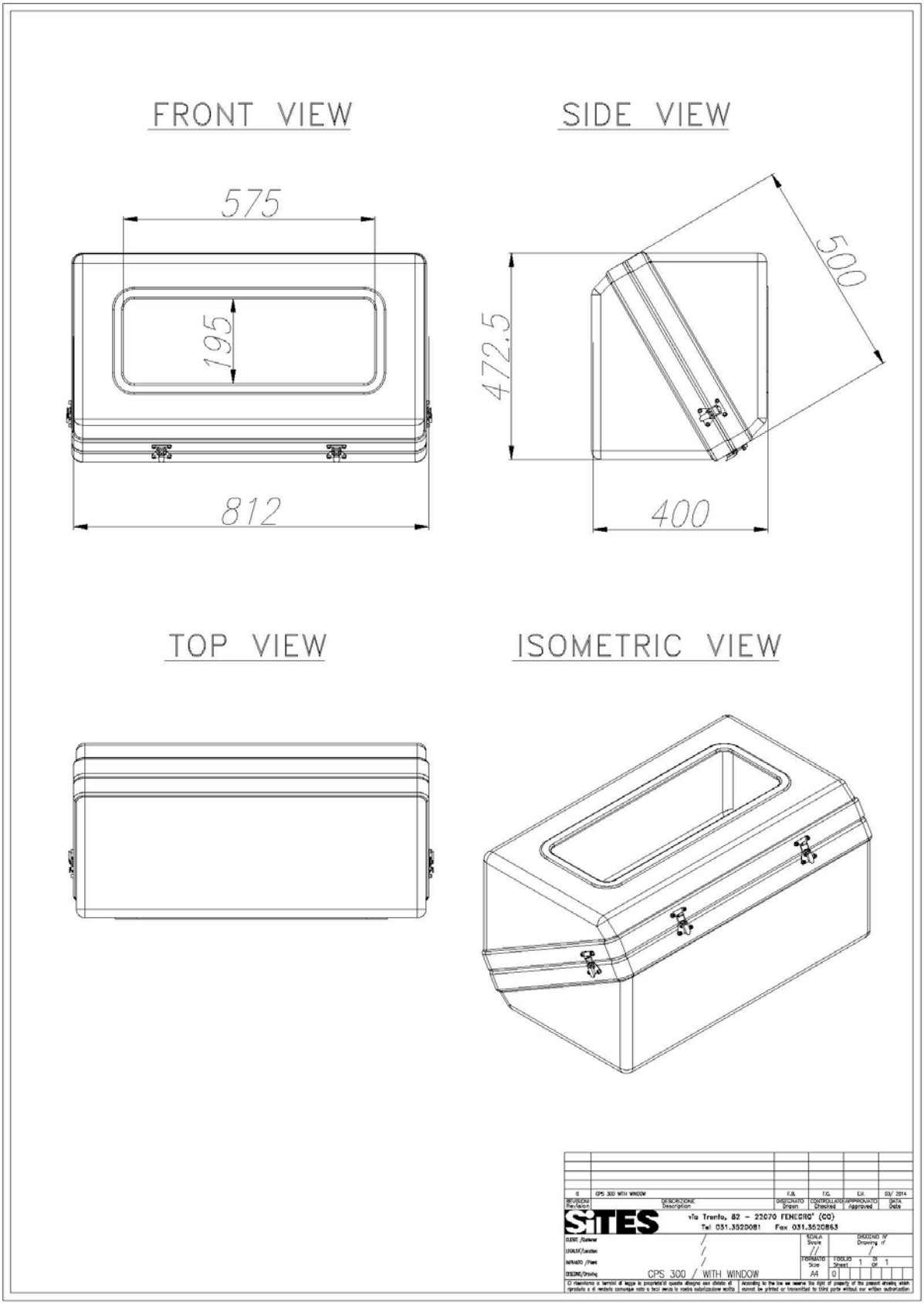

INSTRUMENT PROTECTION BOXES

CPS 101 – CPS 201

The CPS 101 and 201 are ideal for protecting multiple-instruments (2 or 3 instruments). The boxes are made in fiberglass reinforced polyester (GRP) with a thickness of 5 mm, the material used, wich is self-extinguishing and UV resistant, is also particularly suitable for aggressive and corrosive environments.

The instrument enclosure is constituted by the union of two-parts with straight, horizontal parting line beetween the upper and lower part, this type of construction allow for maximum accessibility during installation or maintenance of instruments and manifolds.

The other accessories are:

- Hinges and latches to ensure a tight fitting lid and help prevent the ingress of dirt and moisture.
- Stainless steel device ensure the opening in a safe manner.
- Neoprene gasket mounted on the bottom ensures a perfect tightness and impermeability to liquids and dust.

INSTRUMENT PROTECTION BOXES

GCS 80 – GCS 100

CAN INCLUDE INSTRUMENT AND RELATED OPTIONS WITH MANIFOLD

The box has the same technical characteristics and protection of the CPS with the advantage of having the internal accessibility of 100%.

The box is made of fiberglass reinforced polyester with a thickness of 5 mm, gray RAL 7035.

Is constituted by the union of a lower fixed with a wrap top is completely removable.

The neoprene gasket mounted on the bottom ensures a perfect tightness and impermeability to liquids and dust.

The closing of the cassette is provided by two stainless steel hooks mounted on the side.

The excellent finish material has the following characteristics:

- Degree of protection IP-65
- Resistance to shock
- Self-extinguishing

INSTRUMENT PROTECTION BOXES

GCS 80 – GCS 100

GCS 80

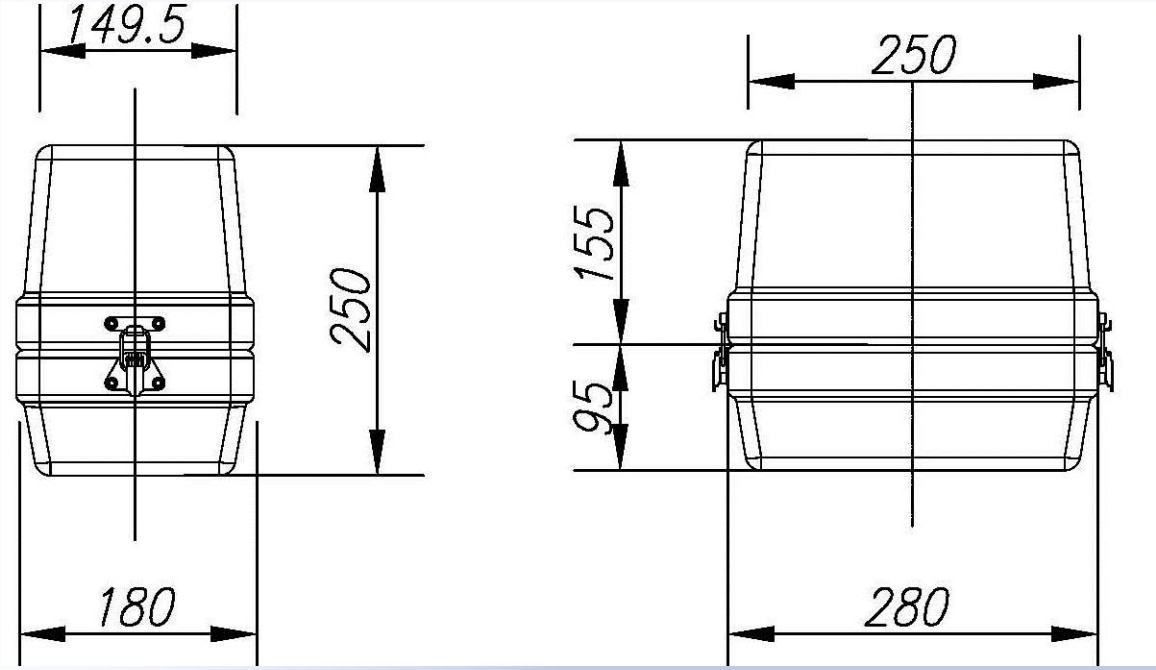

GCS 100

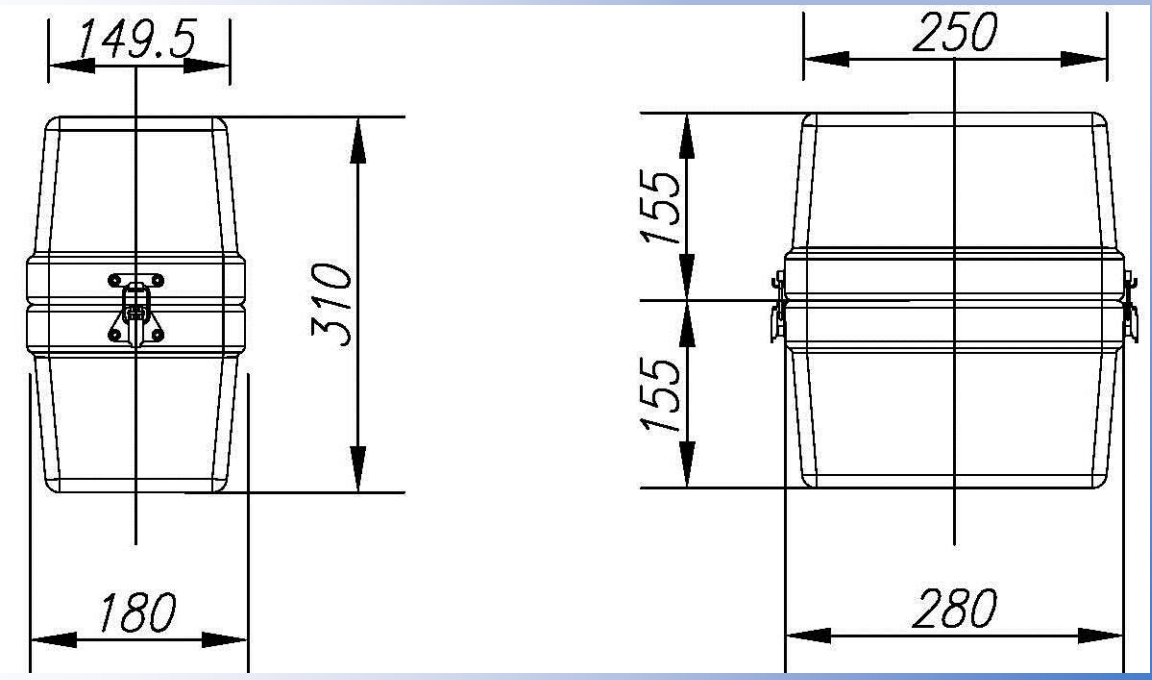

SUNSHADES

PS 100 – PS 200

SUNSHADES ARE AN ECONOMIC AND EFFICIENT PROTECTION FROM THE SUNRAYS DIRECT OVER INSTRUMENTS , PROTECTION FOR THE INTENSE RAINFALL AND THE ACCIDENTAL FALL OF MATERIALS

The protection is built in fiberglass reinforced polyester with a thickness of 2.5 mm in gray RAL 7035. Their installation can be performed with appropriate accessories:

- Pipe 2 "
- A wall

The excellent finish material has the following characteristics:

- Resistance to shock
- Self-extinguishing
- No absorption of hydrocarbons
- Operating temperature -50 °: +87 °

PS 100

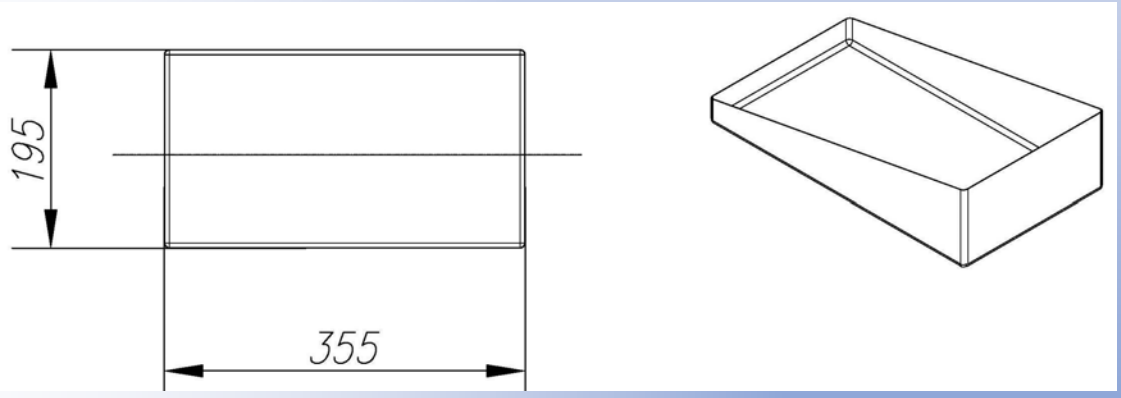

PS 200

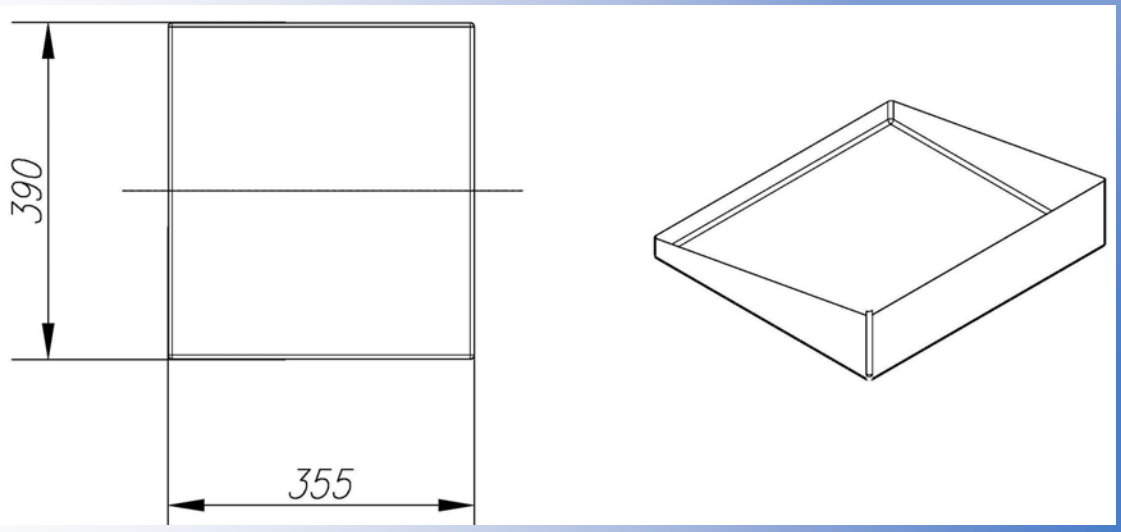

SUNSHADES

SPS 100 – SPS 150 – SPS 200 – SPS 300

This type of sunshades are made with half of instrument protection box, this sunshade is extracted from CPS instrument protection box.

The enclousure are made in fiber glass reinforced polyester thickness to 3 mm in standard colour light grey RAL 7035.

A small canopy with a bracket that allows it to attach directly onto the body of a transmitter or mounting to the pipe stand or steel construction. Sunshield or or commonly called sunshades are different type of instrument protection against:

The excellent finish material has the following characteristics:

- Sun light (overheating)
- Dirt accumulation
- Exposure to atmospheric conditions
- Mechanical damage

SPS 100

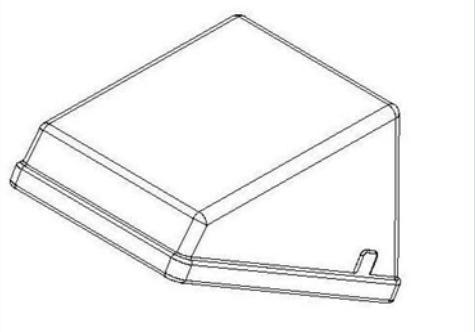

SPS 150

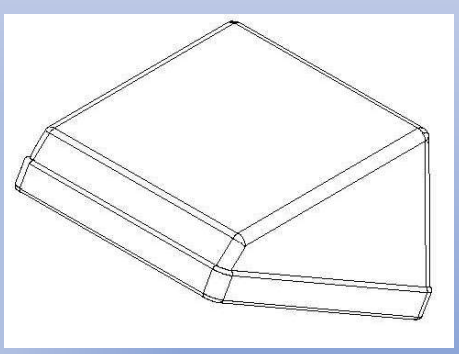

SPS 200

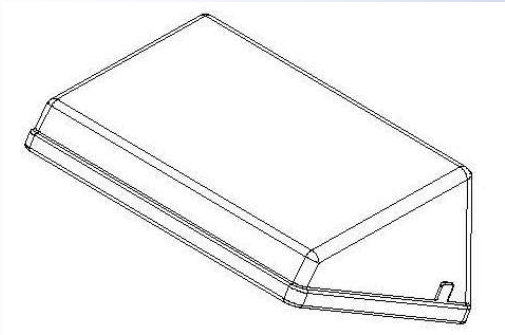

SPS 300

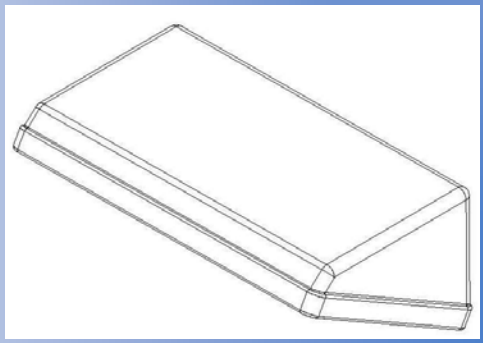

SUNSHADES

SPS 100

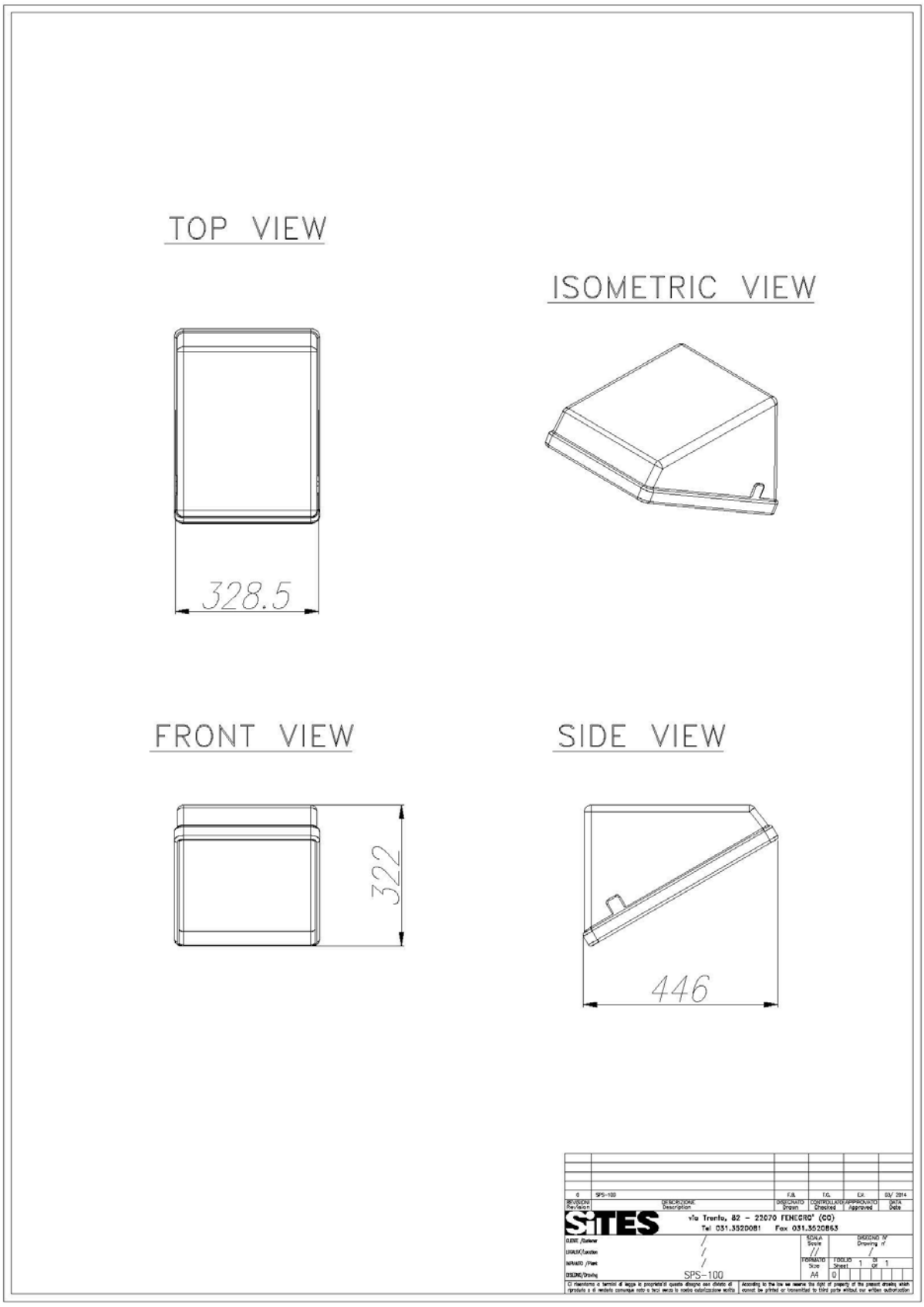

Ci riserviamo a termini di legge in proprietà di questo disegno ed divieto di riprodurlo e di renderlo comunque noto a terzi senza la nostra autorizzazione scritta | According to the law we reserve the right of property of this present drawing which cannot be printed or transmitted to third parte without our written authorization

SUNSHADES

SPS 150

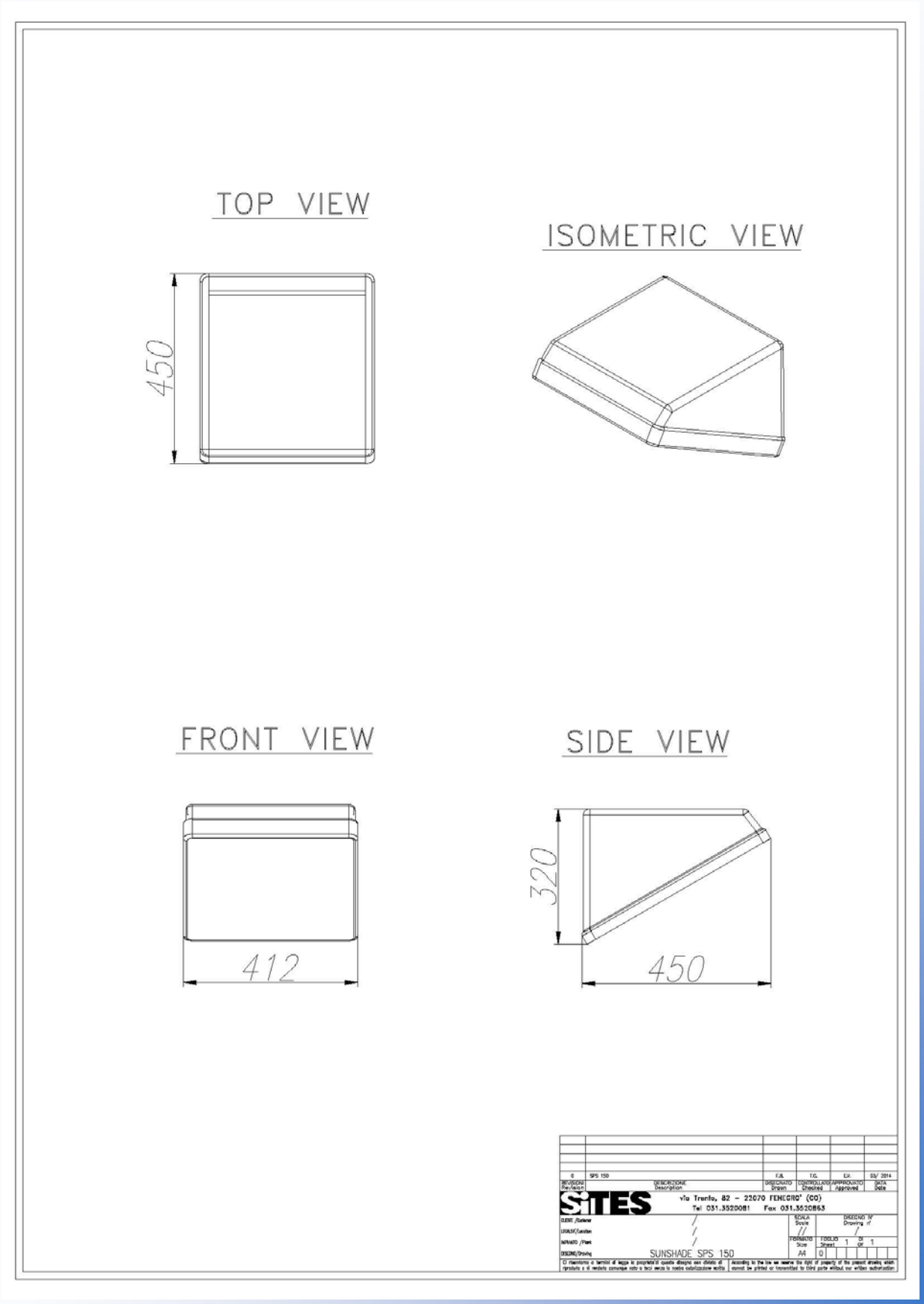

SUNSHADES

SPS 200

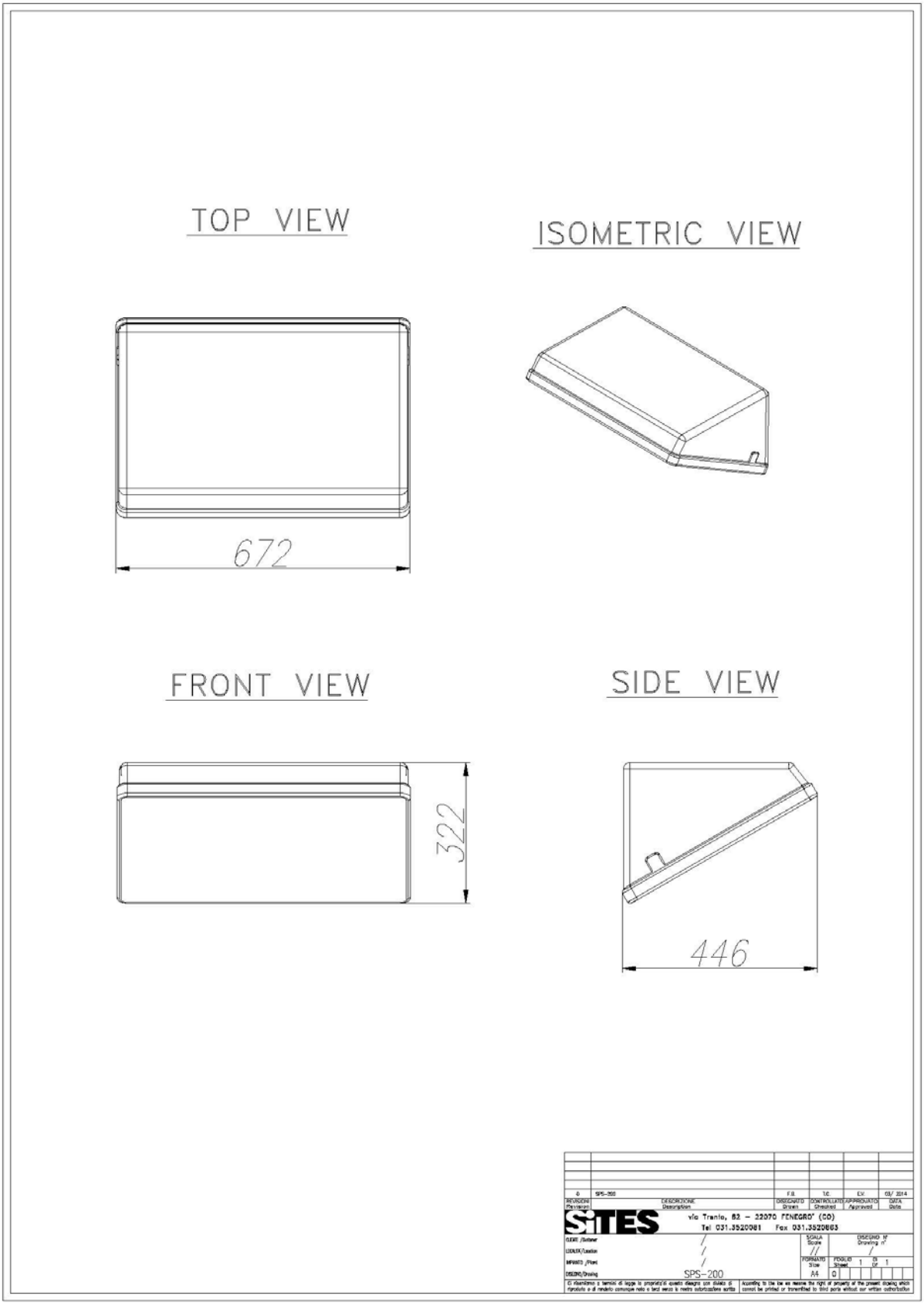

SUNSHADES

SPS 300

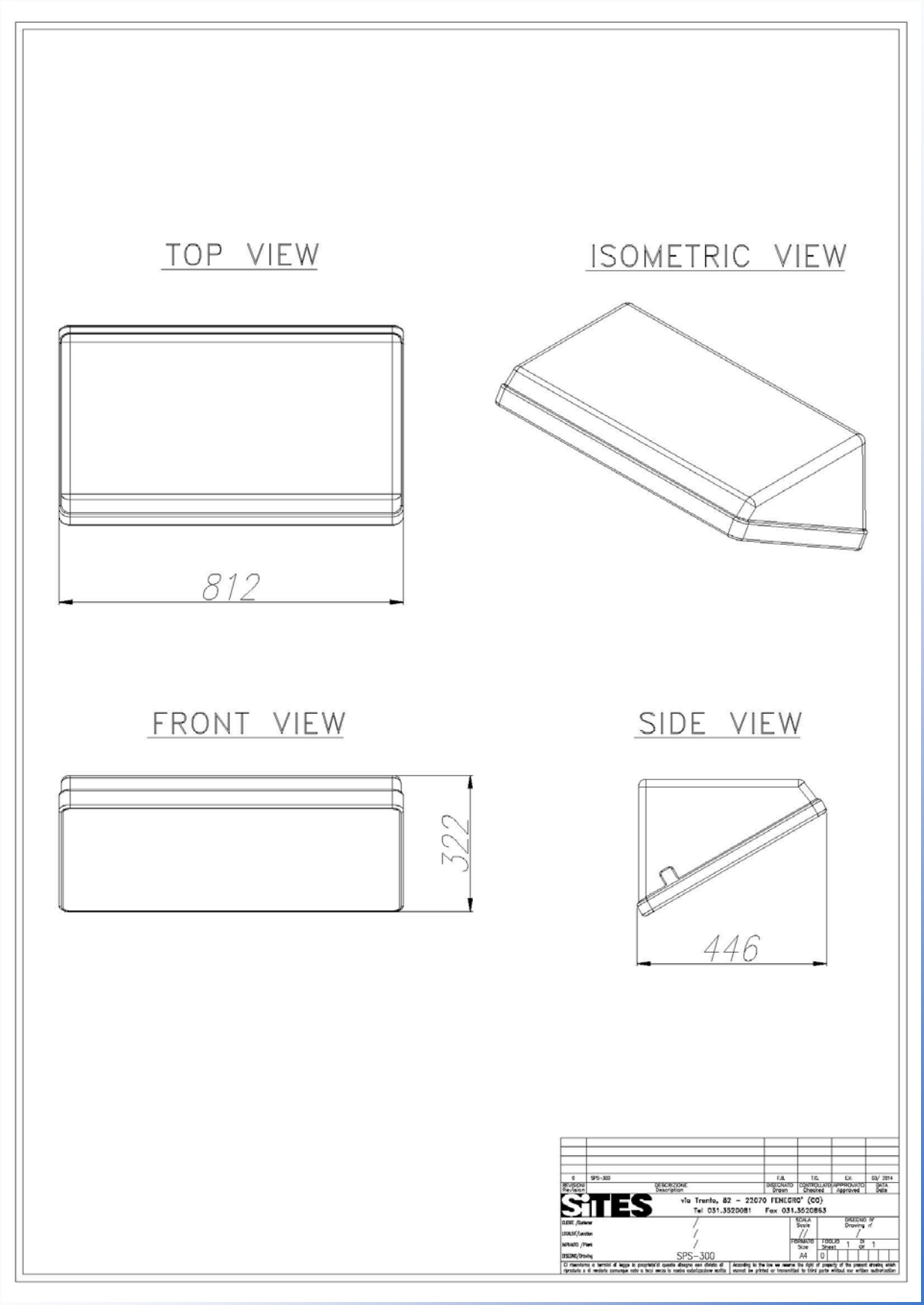

SOFT COVER

SOFT COVER IS DESIGNED FOR EACH CLIENT ALLOWS THE EQUIPMENT FOR HEAT INSULATION & PROTECT FROM FREEZING.

IS MADE OF CANVAS AND CERAMIC FIBER FABRIC AND IS PLACED IN A LAYER OF MINERAL WOOL INSULATION.

The excellent finish material has the following characteristics:

- Resistance to shock
- Self-extinguishing
- No absorption of hydrocarbons

Lloyd's Register LRQA

CERTIFICATE OF APPROVAL

This is to certify that the Quality Management System of:

SITES S.r.l.
Via Trento, 82
22070 Fenegrò (Como) – Italia

has been approved by Lloyd's Register Quality Assurance to the following Quality Management System Standards:

ISO 9001:2008

The Quality Management System is applicable to:

Engineering, manufacturing, assembly and assistance of gas, air, oil and gas treatment plants for petrochemical and energy companies.

This certificate is valid only in association with the certificate schedule bearing the same number on which the locations applicable to this approval are listed.

Approval Certificate
No: LRC 6009580/QMS/U/EN

Original Approval: 2nd June 2010
Current Certificate: 14th June 2016
Certificate Expiry: 14th September 2018

Issued by: Lloyd's Register Quality Assurance Italy Srl
for and on behalf of Lloyd's Register Quality Assurance Limited

UKAS MANAGEMENT SYSTEMS 001

This document is subject to the provision below
Via Cadorna, 69 20090 Vimodrone (MI)
For and on behalf of 1 Trinity Park, Bickenhill Lane, Birmingham, B37 7ES, - United Kingdom.
This approval is carried out in accordance with the LRQA assessment and certification procedures and monitored by LRQA
The use of the UKAS Accreditation Mark indicates Accreditation in respect of those activities covered by the Accreditation Certificate Number 001

Lloyd's Register Group Limited, its affiliates and subsidiaries, including Lloyd's Register Quality Assurance Limited (LRQA), and their respective officers, employees or agents are, individually and collectively, referred to in this clause as 'Lloyd's Register'. Lloyd's Register assumes no responsibility and shall not be liable to any person for any loss, damage or expense caused by reliance on the information or advice in this document or howsoever provided, unless that person has signed a contract with the relevant Lloyd's Register entity for the provision of this information or advice and in that case any responsibility or liability is exclusively on the terms and conditions set out in that contract.

Lloyd's Register LRQA

CERTIFICATE SCHEDULE

SITES S.r.l.
Via Trento, 82
22070 Fenegrò (Como) – Italia

Locations	Activities
Via Trento, 82 22070 Fenegrò (Como) – Italia	Engineering, project management, manufacturing and assembly and assistance of electrical panels, control and power panels for petrochemical and energy companies. Prefabrication of steel structures.
Via Milano, 74 b 22070 Bregnano (Como) - Italia	Engineering, project management, manufacturing and assembly of gas, air, oil and gas equipment for petrochemical and energy companies. Technical assistance activities.

Approval Certificate
No: LRC 6009580/QMS/U/EN

Original Approval: 2nd June 2010
Current Certificate: 14th June 2016
Certificate Expiry: 14th September 2018

Page 1 of 1

UKAS MANAGEMENT SYSTEMS 001

This document is subject to the provision below
Via Cadorna, 69 20090 Vimodrone (MI)
For and on behalf of 1 Trinity Park, Bickenhill Lane, Birmingham, B37 7ES, - United Kingdom.
This approval is carried out in accordance with the LRQA assessment and certification procedures and monitored by LRQA
The use of the UKAS Accreditation Mark indicates Accreditation in respect of those activities covered by the Accreditation Certificate Number 001

Lloyd's Register Group Limited, its affiliates and subsidiaries, including Lloyd's Register Quality Assurance Limited (LRQA), and their respective officers, employees or agents are, individually and collectively, referred to in this clause as 'Lloyd's Register'. Lloyd's Register assumes no responsibility and shall not be liable to any person for any loss, damage or expense caused by reliance on the information or advice in this document or howsoever provided, unless that person has signed a contract with the relevant Lloyd's Register entity for the provision of this information or advice and in that case any responsibility or liability is exclusively on the terms and conditions set out in that contract.

SITES S.r.l.

Via Trento, 82

22070 Fenegrò (CO) - ITALY

Tel.: +39 0313520081

Fax: + 39 0313520863

Email: info@sitessrl.com

www.sunshade.it